Microprocessor Interfacing and Programming Lab
(EL 2001)

PROJECT REPORT

Title: Smart Home Automation Using ATmega32

Submitted by

Ghulam Abbas (23i-6061)

Abdullah Abbasi (23i-6022)

Submitted to

Engr. Maryam Zafar

Engr. Shehzad Ahmed

1 December,2025

National University of Computer and Emerging Sciences, Islamabad

Abstract

This project implements a smart home automation system using the ATmega32 microcontroller. The system monitors **ambient light**, **temperature**, and **flame/fire conditions** using analog sensors and a digital interrupt. An **LDR** controls automatic light intensity indication through LEDs, while an **LM35-based temperature reading** is used to regulate fan speed using **PWM**. A **flame sensor trigger** (via external interrupt INT0) activates an emergency buzzer and displays a "CRITICAL ALERT!" message on the LCD.

A **16×2 LCD** is used to show real-time temperature, fan status, and LDR percentage. All values are updated dynamically only when changes occur, ensuring efficient processing. This project demonstrates microcontroller-based environmental monitoring, PWM motor control, ADC interfacing, and interrupt-driven alert systems.

Objectives

- Interface **LDR, Temperature Sensor, and Flame Sensor** with ATmega32.
- Implement **PWM-based variable fan control** using Timer0.
- Display live environmental data on a **16×2 LCD**.
- Implement **external interrupt INT0** for emergency flame detection.
- Use ADC channels to read analog sensors accurately.
- Demonstrate a complete **smart home monitoring + safety system**.

Components Required

Component	Microcontroller Pin	Power Source	Function
ATmega32	-	5V	Main MCU
LDR Sensor	ADC0	5V	Light intensity detection
LM35 Temperature Sensor	ADC1	5V	Temperature measurement
DC Fan	PB0/PB1 + OCR0 PWM	12V/5V	Temperature-based fan control
LED Indicators	PB5, PB6, PB7	5V	Lighting status indication
Buzzer	PD3	5V	Emergency alert on flame detection
Flame Sensor	PD2 (INT0)	5V	Interrupt-based fire detection
16x2 LCD	PORTC + PD0/PD1/PD4	5V	Display readings/status

Block Diagram

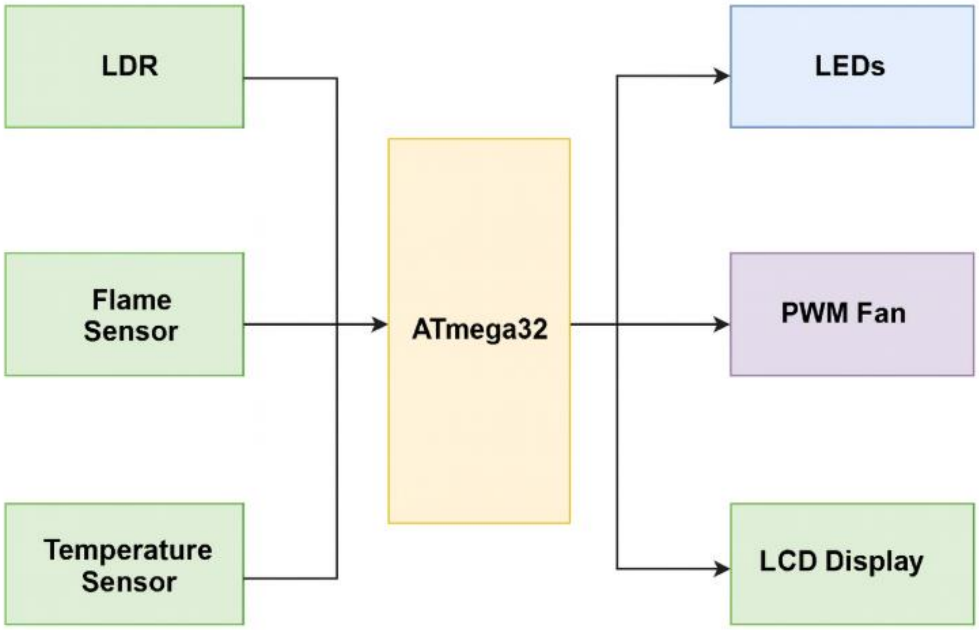

Working Principle

1. Light Monitoring (LDR)

The LDR output is read through ADC0. Based on brightness levels:

- If very dark → All 3 LEDs ON
- Medium light → 2 LEDs ON
- Slight light → 1 LED ON
- Bright light → All LEDs OFF

LDR percentage is calculated and displayed on LCD.

2. Temperature-Based Fan Control

- Temperature is read from ADC1.
- Fan speed is controlled using **PWM on Timer0**.

Temperature	Fan Speed
< 25°C	OFF
25–29°C	25% Duty
30–34°C	50% Duty
35–39°C	75% Duty
≥ 40°C	100% Duty

LCD displays:
`FAN: ON Temp: 32C`
or
`FAN: OFF Temp: 24C`

3. Flame Detection

- Flame sensor triggers **INT0** (falling edge).
- ISR immediately:
    - Turns ON the buzzer
    - Clears LCD
    - Displays **CRITICAL ALERT!** message
    - Overrides normal display

This provides a fast and reliable safety mechanism.

4. LCD Monitoring

LCD shows 2-line real-time status:

Line 1: LDR (% brightness)
Line 2: Fan ON/OFF + Temperature

LCD is updated **only if the value changes**, improving performance.

Proteus Simulation

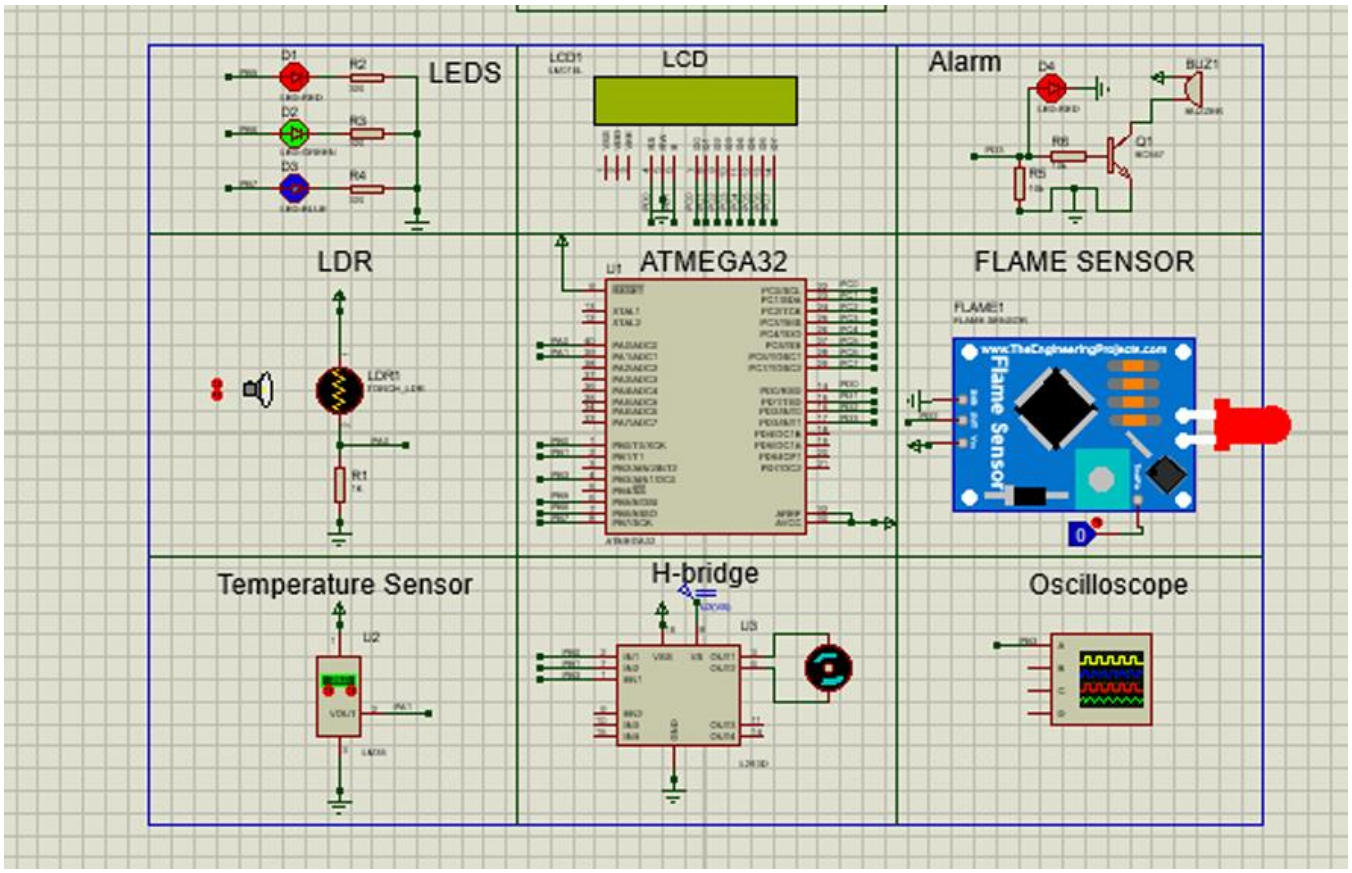

Wiring Explanation

1. LDR

- LDR + resistor forming voltage divider
- Output → ADC0
- Value converted to percentage (0–100%)

2. Temperature Sensor (LM35)

- Output connected to ADC1
- ADC reading doubled (LSL) to convert to °C

3. Fan & Motor Driver

- PWM output OCR0
- IN1/IN2 on PB0/PB1 control direction and enable
- Motor speed varies by duty cycle

4. Flame Sensor

- Digital output → PD2 (INT0)
- On detection, MCU enters ISR

5. LCD

- 8-bit data mode via PORTC
- RS/RW/E via PD0/PD1/PD4

Software Overview

The software consists of:

1. Initialization

- PORT directions configured
- ADC enabled
- PWM Timer0 initialized
- LCD setup
- INT0 configured for falling-edge interrupt

2. Sensor Reading

- ADC0 → LDR
- ADC1 → Temperature
- LDR mapped to 3 LED outputs
- Fan controlled via PWM

3. Display System

- LCD updated only when value changes
- Efficient inline character printing

4. Interrupt Service Routine

The ISR:

- Turns ON buzzer
- Clears LCD
- Prints emergency message
- Ensures quick response

FLOWCHART

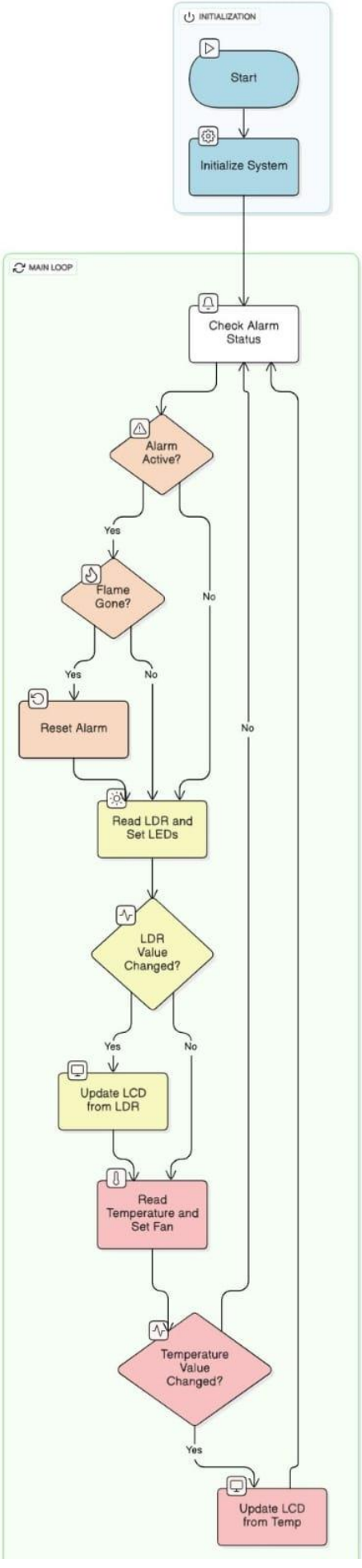
INITIALIZATION
Start
Initialize System
MAIN LOOP
Check Alarm Status
Alarm Active?
Yes
No
Flame Gone?
Yes
No
Reset Alarm
No
Read LDR and Set LEDs
LDR Value Changed?
Yes
No
Update LCD from LDR
Read Temperature and Set Fan
Temperature Value Changed?
Yes
Update LCD from Temp

Code Explanation

1. ADC Initialization

- AVCC reference
- Left-adjusted result (8-bit use)
- Prescaler 128

2. LDR Reading

- Read ADC0
- Based on thresholds, LED pattern is updated
- LDR percentage computed using:
  `(ADC * 151) / 256` capped at 100%

3. Temperature Reading

- Read ADC1
- Multiply by 2 to approximate °C

4. Fan Control with PWM

Uses Timer0 Fast PWM:
`WGM00`, `WGM01`, `COM01`
Fan speed set using:
`OCR0 = 0-255`

5. INT0 Interrupt

The flame sensor output is connected to **PD2 (INT0)**.

Interrupt Trigger:

- Falling edge mode is enabled.
- When flame is detected → INT0 ISR executes immediately.

ISR Actions:

1. **Buzzer activated** (PD3 set HIGH)
2. **LCD display cleared**
3. Cursor moved to first line
4. "CRITICAL ALERT!" is written character-by-character

This ensures an immediate and clear emergency response.Note: code is too long too paste here.

Hardware Picture

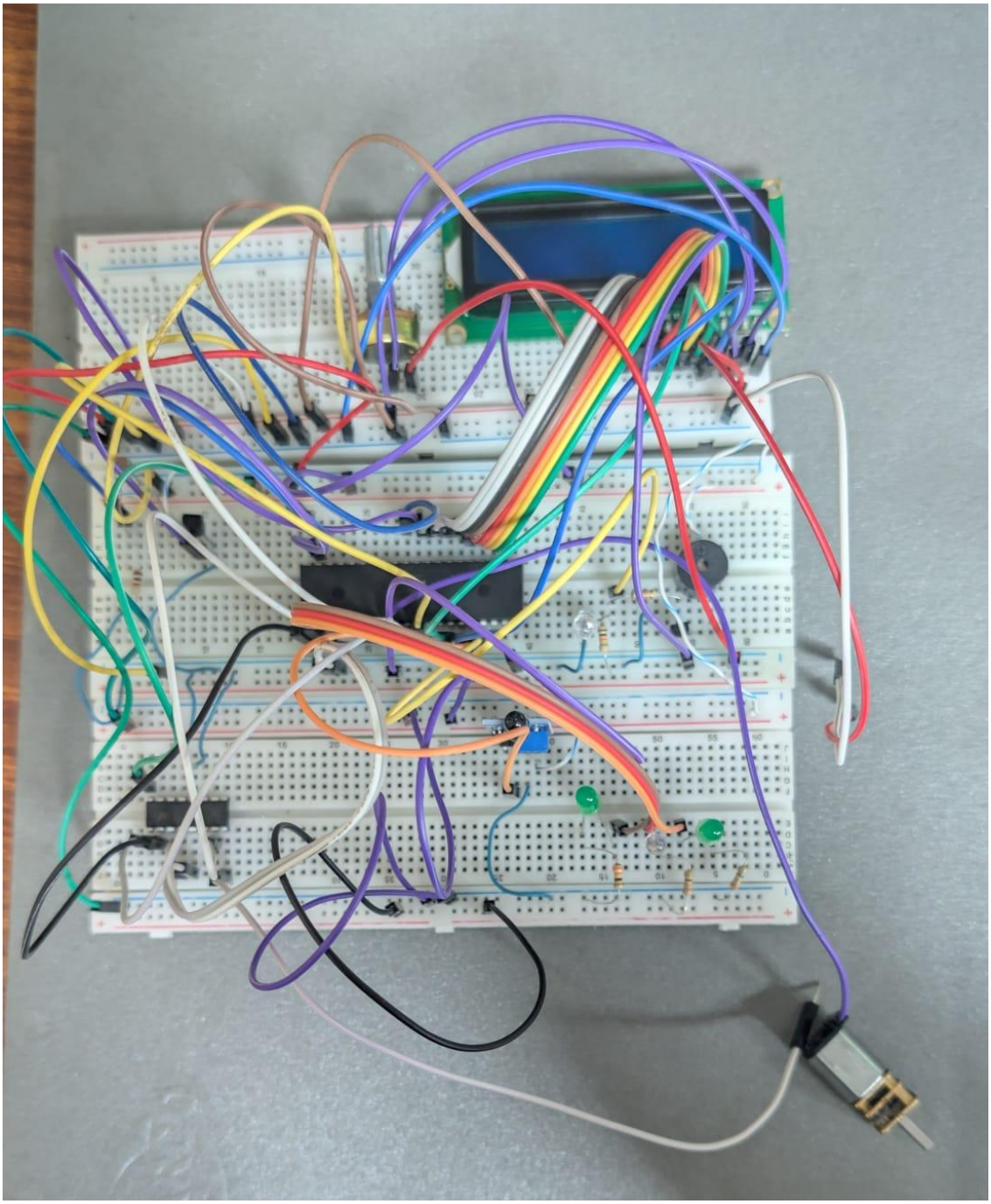

Results

- LEDs correctly indicated LDR-based light intensity.
- PWM fan speed control worked smoothly across multiple temperature ranges.
- LCD displayed live sensor values with clear formatting.
- Flame interrupt responded instantly and activated buzzer + emergency LCD message.
- The system worked continuously and reliably under testing.

Analysis

1. **Performance:**
   Smooth ADC readings and responsive PWM output ensured stable environmental control.
2. **Interrupt Efficiency:**
   INT0 successfully bypassed all tasks and handled the emergency immediately.
3. **Power Efficiency:**
   Fan used PWM, saving energy compared to always-ON motors.
4. **Sensor Accuracy:**
   LDR and LM35 provided stable readings with proper filtering.
5. **Practical Challenges:**

   - Calibration of LDR
   - Ensuring LCD timing delays
   - Noise isolation on flame sensor line

Conclusion

This smart home automation system effectively integrates environmental monitoring, fan control, lighting automation, and fire alerting using the ATmega32 microcontroller. By combining ADC-based sensing for accurate environmental readings, PWM motor control for precise fan operation, LCD output for real-time status display, and interrupt-driven safety responses for emergencies, the system offers a reliable and efficient embedded solution. It operates seamlessly, responding rapidly to changes in temperature, light, or fire conditions, making it a practical low-cost prototype for basic smart home applications.

The system’s modular design allows for easy upgrades and expansions, providing flexibility for more advanced automation needs. Additional sensors, actuators, or communication modules can be incorporated without major modifications, enhancing its adaptability. At the same time, careful hardware selection and optimized programming ensure low power consumption while maintaining precise and timely sensor feedback, striking a balance between performance and efficiency.

Overall, this project demonstrates how simple, well-optimized hardware and software can create an effective and practical smart home solution for small-scale applications. It highlights how embedded systems can improve comfort, safety, and energy efficiency within individual homes, providing a convenient and low-cost way to implement automation without the need for large-scale infrastructure.